softblock · quickstart

instructional video

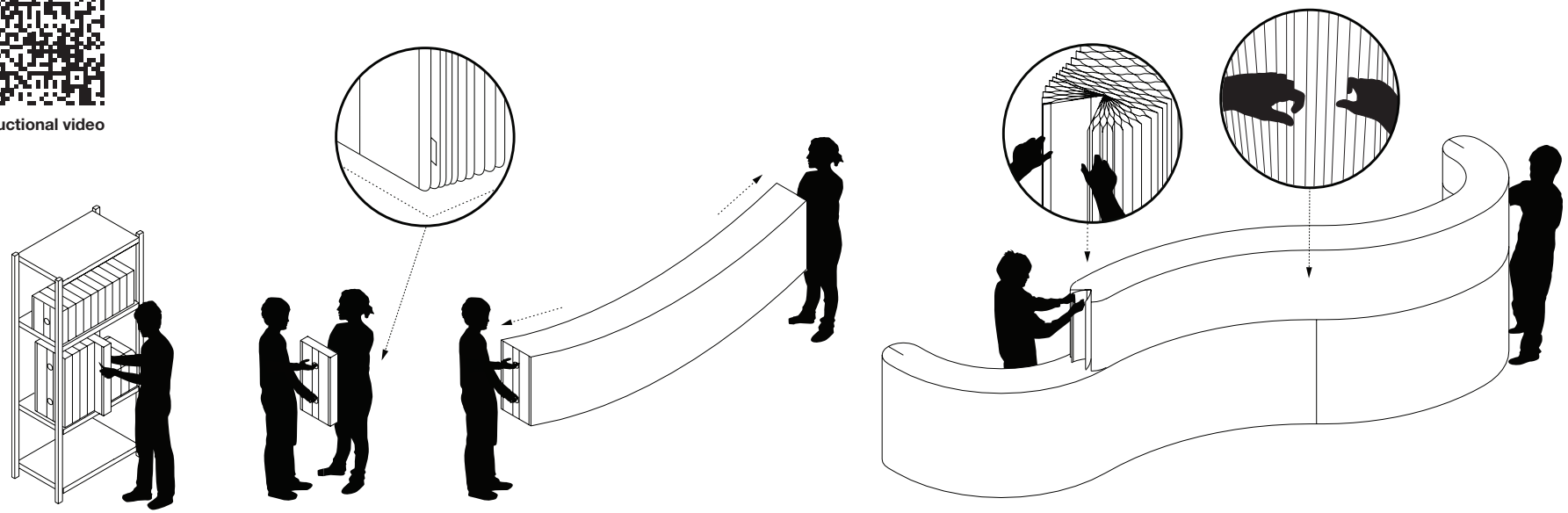

step 1 step 2 step 3 step 4 step 5

set up

step 1: Compressed softblocks can be stored horizontally or vertically, like books on a shelf.

step 2: Ensure that floor is flat, clean and dry before setting up softblock. Stand softblock with rounded edge side on bottom. With a person at each end of softblock, take a firm hold on the circular hole handles.

step 3: Stretch softblock. Pull until you feel significant tension from the person on the other end. During the stretching process, softwall should extend to 30 feet (9 meters) to fully relax the honeycomb cells. Hold the stretch for a minute. When pulling softblock open, lift each end 1 inch (3 centimeters) off the floor to avoid dragging it into the ground.

If softblock is not achieving the length you'd like (maximum recommended length of 15 feet (4.5 meters)), you may need to repeat the process. Paper softblock uses a stiffer material and requires extra stretching.

step 4: Fold each magnetic end panel vertically onto itself as shown in diagram. This stabilizes softblock so that it is completely freestanding. You may also connect the magnetic end panel of one softblock to that of an adjacent softblock to create longer expanses, or connect it to other steel surfaces. Please ask molo about the steel strip accessory which can provide an anchor point for softblocks.

step 5: To rearrange the position / shape of the softblock, hold the fins between your knuckles, lift gently and pull into place. Pulling softblock is better than pushing into a desired position, as pushing may crush and soften the fins on the bottom of the block. softblocks may be stacked in horizontal layers to reach a desired height.

use + care

· textile softwall + softblock are water, tear and UV resistant (will not discolour in sunlight).

· paper softwall + softblock are not suitable for wet or humid environments.

· When cleaning floors, compress and store softblocks to keep the bottom of softblocks clean and uncrumpled.

· Baby wipes work well for cleaning textile softwall + softblock (or any nonabrasive cloth + water). If there is a stubborn stain on textile softwall try "Mr. Clean magic eraser". Use with care as they can abrade the textile.

· textile softwall + softblock are made from an antistatic material which does not attract dust. Compressing and then expanding softwall + softblock will push air through the cells, blowing out dust that has collected inside.

· softwall + softblock will benefit from periodically being closed and left in a compressed state for a few days in order to regain shape memory.

· Clean optional wool felt handles with a lint brush or damp cloth.

· It is possible to repair small tears in softblock, ask for details.

· softwall + softblock are intended to have a long, useful life. Nevertheless, they are made with material that is 100% recyclable (just remove magnetic end panels). The paper used for brown and blue softwall + softblock is made from wood harvested from FSC® Certified (FSC® C158591) responsible sources. textile softwall + softblock is 100% polyethylene and is ♲ in the recycling stream.

Designed by Stephanie Forsythe and Todd MacAllen, manufactured by molo and protected by one or more patents and/or design registrations held by molo, viewable at molodesign.com/ip

1470 Venables Street Vancouver, B.C. Canada V5L 2G7 t +1 604 685 0340 f +1 604 685 0342 info@molodesign.com www.molodesign.com

opening softwall + softblock box

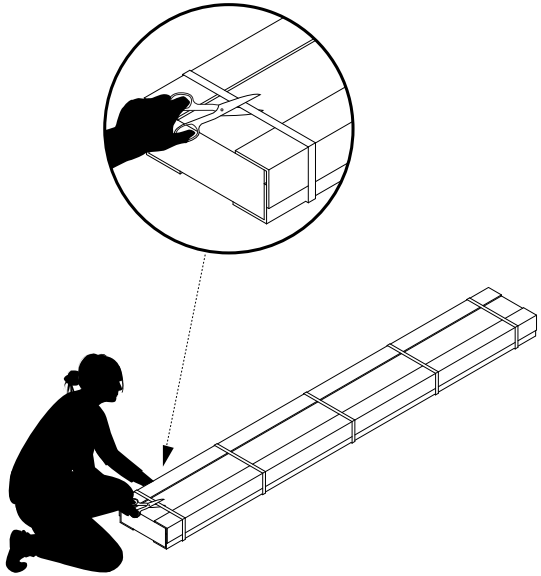

step 1

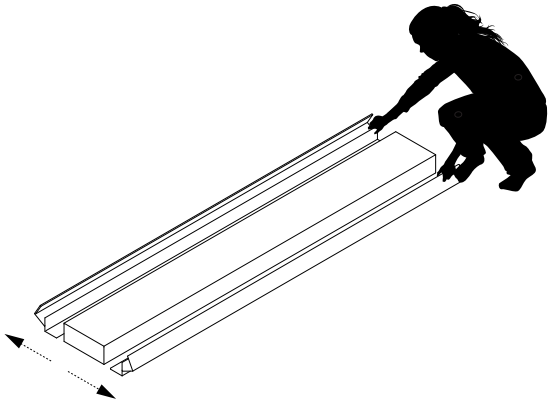

step 2

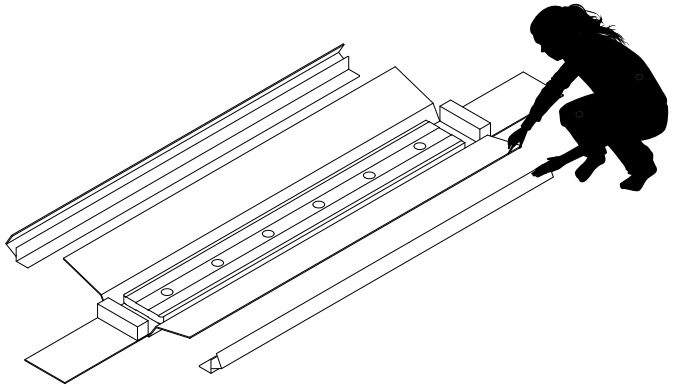

step 3

softwall + softblock packaging is designed for ease of reuse and is fully recyclable. We recommend you keep the original packaging if you plan on storing softwall + softblock for extended periods of time or are transporting walls between installations. To repackage softwall, follow directions in reverse and secure with strapping, stretch wrap, or our reusable velcro strap accessory.

step 1: Cut plastic strapping (do NOT cut cardboard).

step 2: Unfold and remove U-channels.

step 3: Unfold box.

1470 Venables Street Vancouver, B.C. Canada V5L 2G7 t +1 604 685 0340 f +1 604 685 0342 info@molodesign.com www.molodesign.com